emuca
furniture fittings solutions

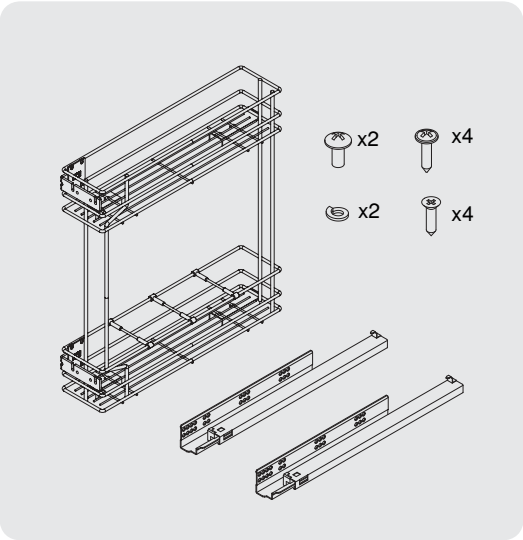

1

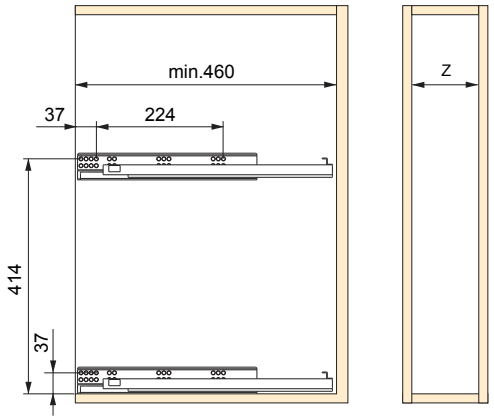

	Z
150	min. 112
200	min. 162

2

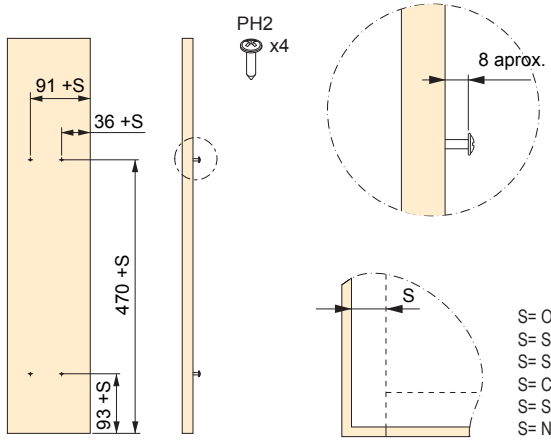

S= Overlay
S= Sormonto
S= Solape
S= Chevauchement
S= Sobreposição da ilharga
S= Nałożenie

Max.
2x12,5kg

3

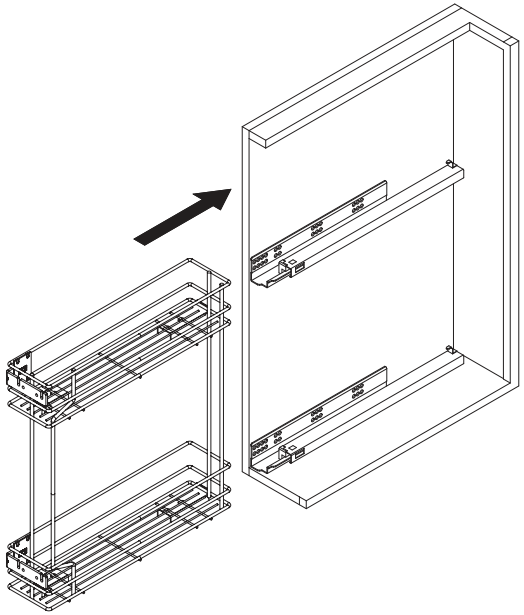

4

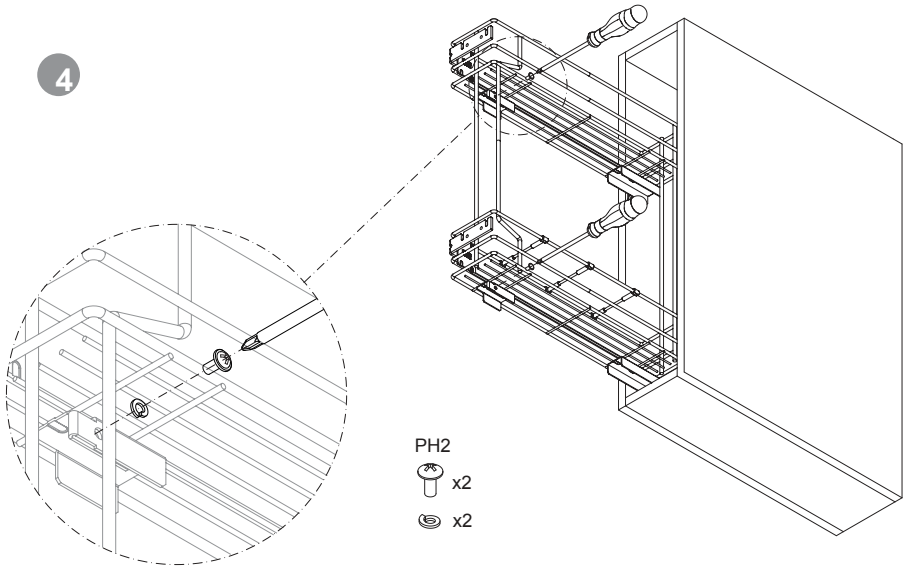

emuca
furniture fittings solutions

5

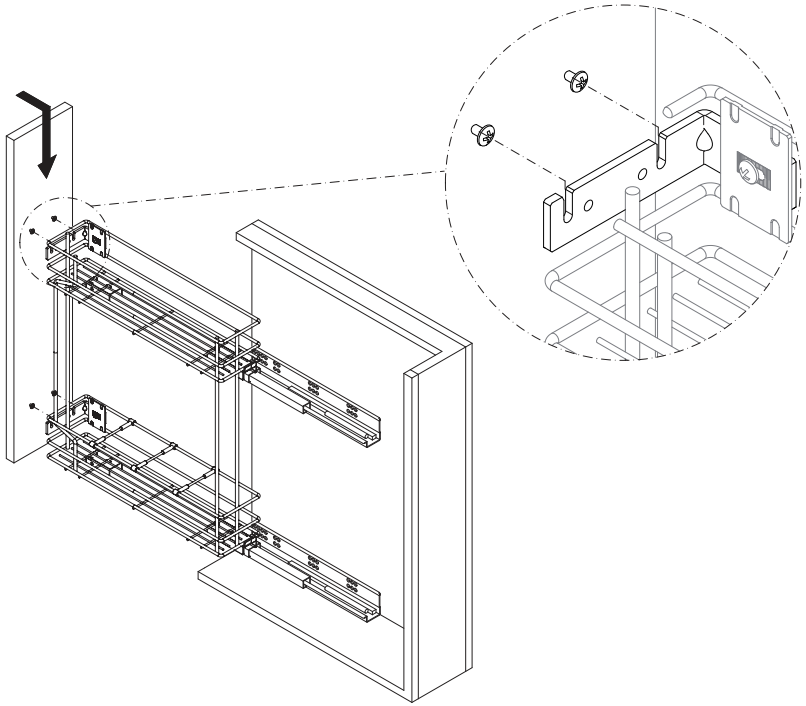

6

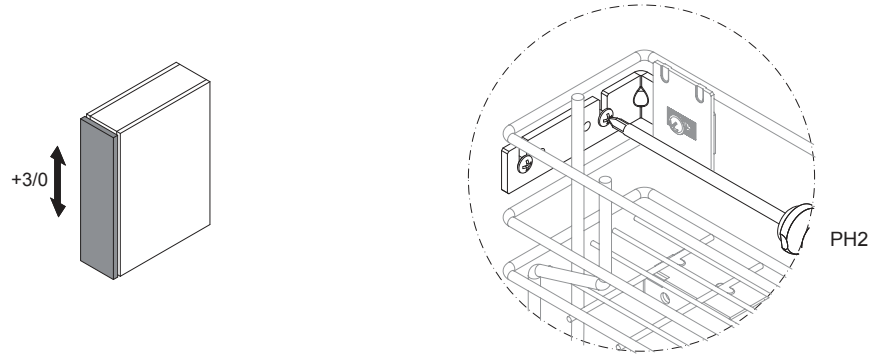

7

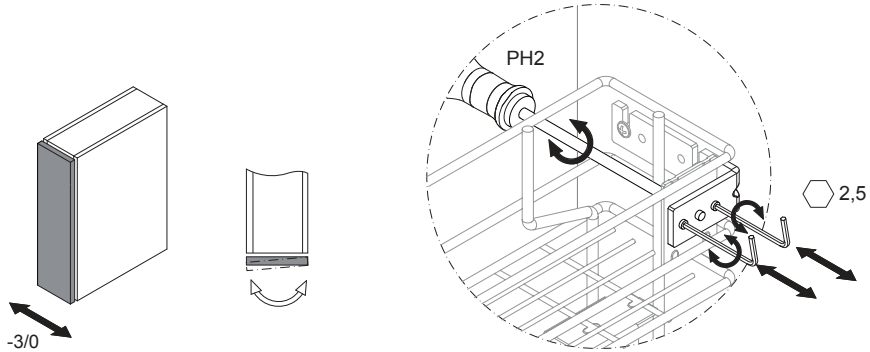

8

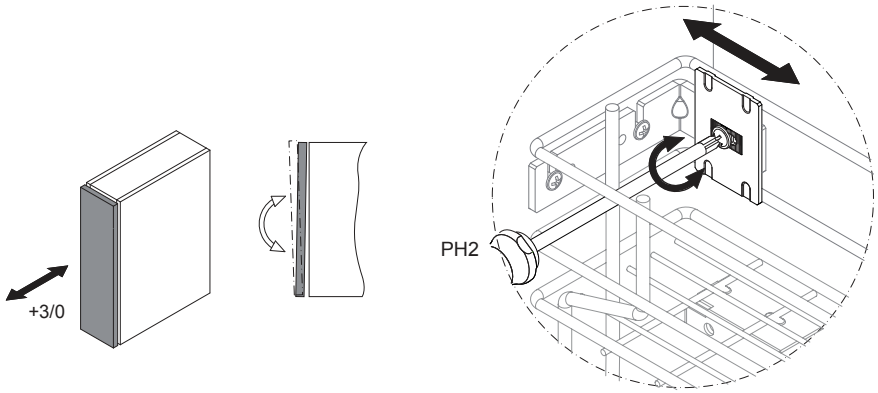
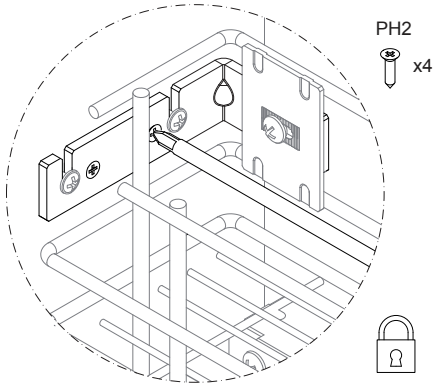
9